Presentation

On

END EFFECTORS

In

robotics

Submitted To:

ABCD

Submitted By:

XYZ

****

Mechatronics

END EFFECTORS

In robotics, an **end effector** is the device at the end of a robotic arm, designed to interact with the environment. The exact nature of this device depends on the application of the robot.

The end effector means the last link (or end) of the robot. At this endpoint the tools are attached. In a wider sense, an end effector can be seen as the part of a robot that interacts with the work environment. This does not refer to the wheels of a mobile robot or the feet of a humanoid robot which are also not end effectors—they are part of the robot's mobility.

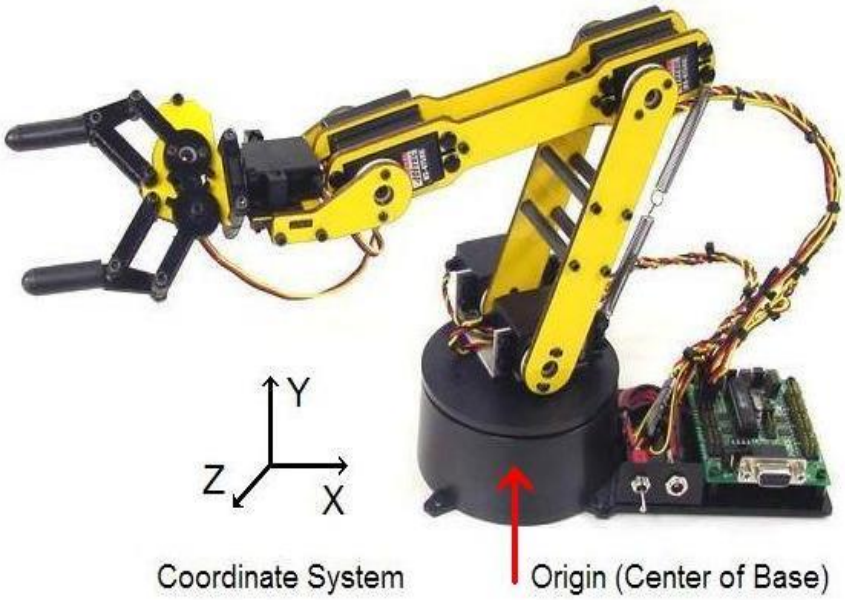

End effectors may consist of a gripper or a tool. The gripper can be of two fingers, three fingers or even five fingers.

Mechanism of gripping

Generally, the gripping mechanism is done by the grippers or mechanical fingers. Though in the industrial robotics due to less complications, two finger grippers are used. The fingers are also replaceable. Due to gradual wearing, the fingers can be replaced without actually replacing the grippers.

Shape of the gripping surface

The shape of the gripping surface on the fingers can be chosen according to the shape of the objects that are lifted by the grippers. For example, if the robot is designated a task to lift a round object, the gripper surface shape can be a negative impression of the object to make the grip efficient, or for a square shape the surface can be plane.

Types:

1. Impactive – jaws or claws which physically grasp by direct impact upon the object.
2. Ingressive – pins, needles or hackles which physically penetrate the surface of the object (used in textile, carbon and glass fibre handling).
3. Astrictive – suction forces applied to the objects surface (whether by vacuum, magneto– or electroadhesion).
4. Contigutive – requiring direct contact for adhesion to take place (such as glue, surface tension or freezing).

Mechanical Grippers

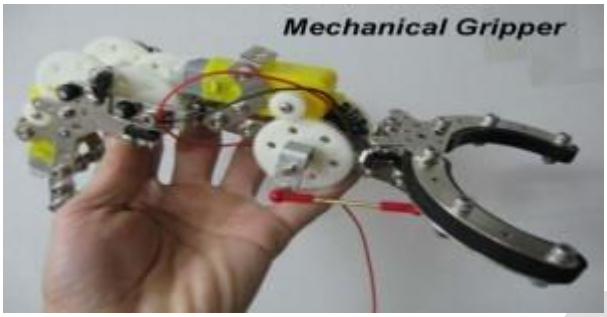

A mechanical gripper is used as an *end effector* in a robot for grasping the objects with its *mechanically* operated fingers. In industries, two fingers are enough for holding purposes. As most of the fingers are of *replaceable* type, it can be easily removed and replaced.

A robot requires either hydraulic, electric, or pneumatic drive system to create the input power. The power produced is sent to the gripper for making the fingers react. It also allows the fingers to perform open and close actions. Most importantly, a *sufficient force* must be given to hold the object.

In a mechanical gripper, the holding of an object can be done by *two different methods* such as:

- Using the finger pads as like the shape of the work part.
- Using soft material finger pads.

In the first method, the contact surfaces of the fingers are designed according to the work part for achieving the *estimated shape*. It will help the fingers to hold the work part for some extent.

In the second method, the fingers must be capable of supplying sufficient force to hold the work part. To avoid scratches on the work part, *soft type pads* are fabricated on the fingers. As a result, the contact surface of the finger and co – efficient of friction are improved. This method is very simple and as well as *less expensive*. It may cause slippage if the force applied against the work part is in the parallel direction. The slippage can be avoided by designing the gripper based on the force exerted.

SOME Tech

$$\mu n_f F_g = w \qquad \ldots\ldots\ldots\ldots\ldots\ldots \qquad 1$$

μ:- co – efficient of friction between the work part and fingers

n_f :- no. of fingers contacting

F_g :- Force of the gripper

W:- weight of the grasped object

The equation 1 must be *changed* if the weight of a work part is more than the force applied to cause the slippage.

$$\mu\ n_f F_g = w\ g \qquad \ldots\ldots\ldots\ldots\ldots\ldots \qquad 2$$

g => g factor

During rapid grasping operation, the work part will get *twice* the weight. To get rid out of it, the modified equation 1 is put forward by ***Engelberger.*** The g factor in the equation 2 is used to calculate the acceleration and gravity.

The *values of g factor* for several operations are given below:

- g = 1 – acceleration supplied in the opposite direction.
- g = 2 – acceleration supplied in the horizontal direction.
- g = 3 – acceleration and gravity supplied in the same direction.

Pneumatic gripper

A **pneumatic gripper** is a specific type of pneumatic actuator that typically involves either parallel or angular motion of surfaces, A.K.A. “tooling jaws or fingers” that will grip an object. When combined with other pneumatic, electric, or hydraulic components, the gripper can be used as part of a "pick and place" system that will allow a component to be picked up and placed somewhere else as part of a manufacturing system.

Types of Pneumatic Grippers:

The most popular types of pneumatic grippers are the 2 jaw parallel and 2 jaw angular gripper styles. Parallel grippers open and close parallel to the object that it will be holding, these are the most widely used grippers. They are the simplest to tool and can compensate for some dimensional variation. Angular grippers move the jaws in a radial manner to rotate the jaws away from the object and therefore require more space.

SOME Tech

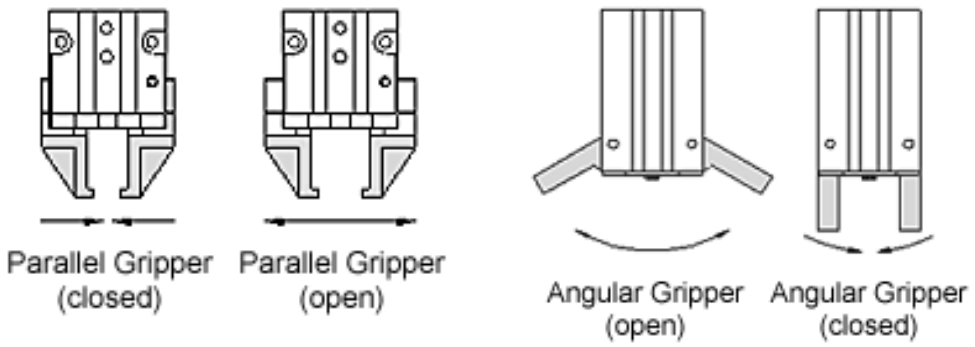

Adhesive grippers

A type of end effector that uses a continuously fed ribbon covered with an adhesive that sticks to the objects the robot manipulates. **Adhesive grippers** are commonly used for lightweight materials where other gripper types would be less effective. An adhesion gripper is a robot end effector that grasps objects by literally sticking to them. In its most primitive form, this type of gripper consists of a rod, sphere, or other solid object covered with two-sided tape.

A major asset of the adhesive gripper is the fact that it is simple. As long as the adhesive keeps its "stickiness," it will continue to function without maintenance. However, there are certain limitations. The most significant is the fact that the adhesive cannot readily be disabled in order to release the grasp on an object. Some other means, such as devices that lock the gripped object into place,must be used.

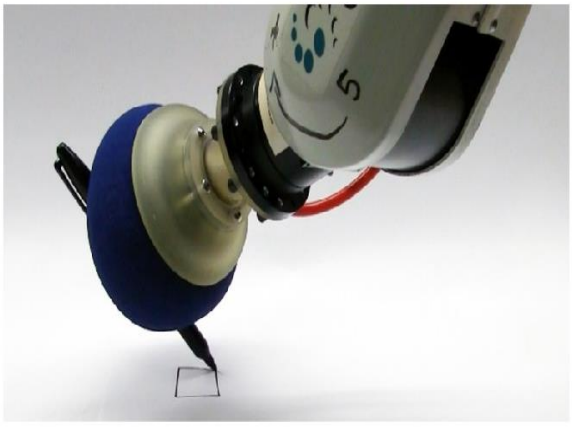

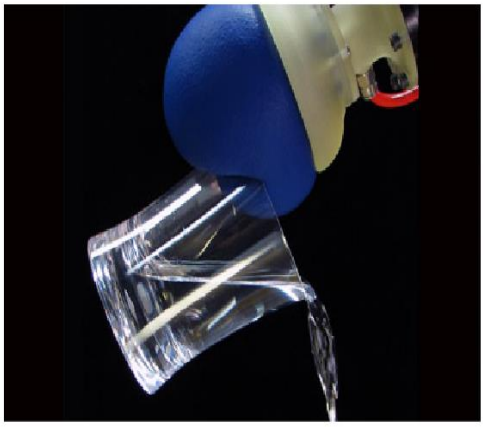

Magnetic grippers

Magnetic grippers are most commonly used in a robot as an end effector for grasping the *ferrous* materials. It is another type of handling the work parts other than the mechanical grippers and vacuum grippers.

Types of magnetic grippers:

The magnetic grippers can be classified into *two common types*, namely:

Magnetic grippers with

Electromagnets:

Electromagnetic grippers include a *controller unit* and a *DC power* for handling the materials. This type of grippers is easy to control, and very effective in releasing the part at the end of the operation than the permanent magnets. If the work part gripped is to be released, the polarity level is minimized by the controller unit before the electromagnet is turned off. This process will certainly help in *removing the magnetism* on the work parts. As a result, a best way of releasing the materials is possible in this gripper.

Permanent magnets:

The permanent magnets do not require any sort of external power as like the electromagnets for handling the materials. After this gripper grasps a work part, an additional device called as *stripper push – off pin* will be required to separate the work part from the magnet. This device is incorporated at the sides of the gripper.

The advantage of this permanent magnet gripper is that it can be used in hazardous applications like *explosion-proof apparatus* because of no electrical circuit. Moreover, there is no possibility of *spark production* as well.

Benefits:

- This gripper only requires *one surface* to grasp the materials.
- The grasping of materials is done *very quickly*.
- It does not require *separate designs* for handling different size of materials.
- It is capable of grasping materials with *holes*, which is unfeasible in the vacuum grippers.

SONE Tech

Importance:

The end effectors that can be used as tools serves various purposes. Such as, Spot welding in an assembly, spray painting where uniformity of painting is necessary and for other purposes where the working conditions are dangerous for human beings. Surgical robots have end effectors that are specifically manufactured for performing surgeries. The end effector of an assembly line robot would typically be a welding head, or a paint spray gun. A surgica robot's end effector could be a scalpel or others tools used in surgery. Other possible end effectors are machine tools, like a drill or milling cutters. The end effector on the space shuttle's robotic arm uses a pattern of wires which close like the aperture of a camera around a handle or other grasping point.

SOME Tech